HELLO KIDS!

HERE YOU´VE GOT A FUN ACTIVITY TO DO. FOLLOW THE DIFFERENT STEPS TO CREATE AN ABSTRACT PORTRAIT OF YOU.

YOU CAN PAINT IT USING CRAYONS, FELTIPS, WATER COLORS…

I´D LIKE TO RECEIVE YOUR PORTRAIT PHOTOS, SO PLEASE SEND ME AN E-MAIL WITH THEM.

THANKS,

ESPERANZA esalinem@educacion.navarra.es

HOLA CHICOS,

AQUÍ TENÉIS UNA ACTIVIDAD DIVERTIDA. SEGUIR LOS PASOS INDICADOS PARA CREAR UN RETRATO ABSTRACTO DE VOSOTROS MISMOS.

PODEIS PINTARLOS CON PINTURAS, ROTULADORES, ACUARELAS…

ME GUSTARÍA RECIBIR VUESTROS RETRATOS. ASÍ QUE PODÉIS ENVIÁRLOS A MI E-MAIL.

GRACIAS,

ESPERANZA

esalinem@educacion.navarra.es

Draw an Abstract Face

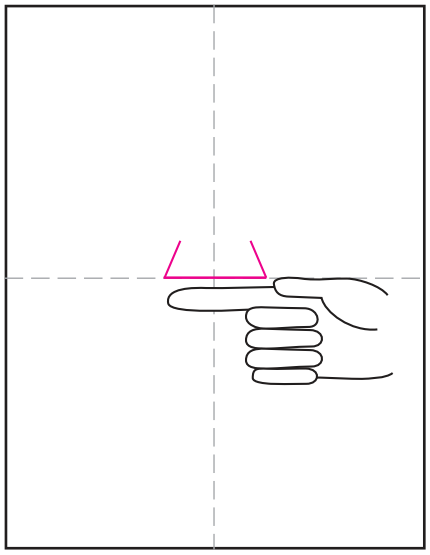

1. Make guide lines. Start the nose.

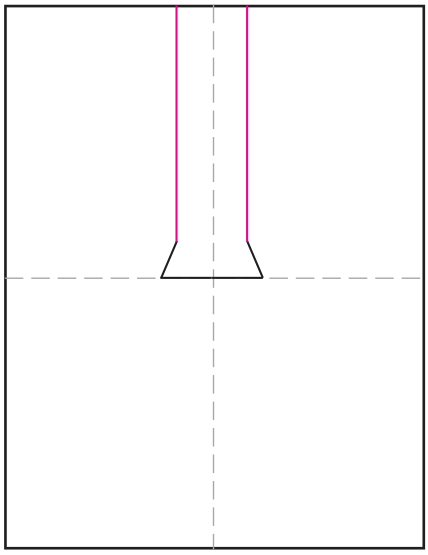

2. Add two lines going up.

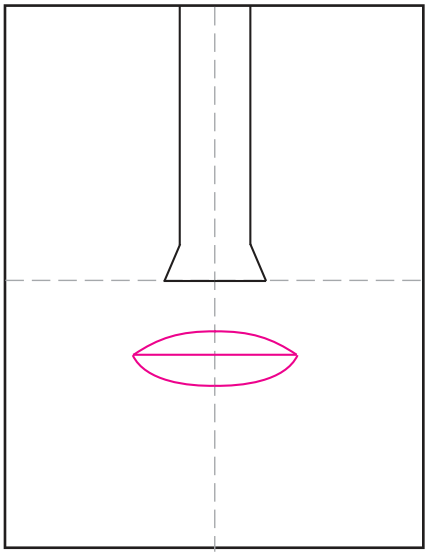

3. Draw a mouth.

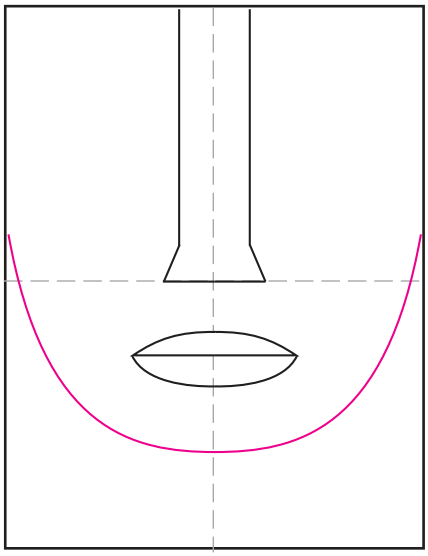

4. Draw the chin.

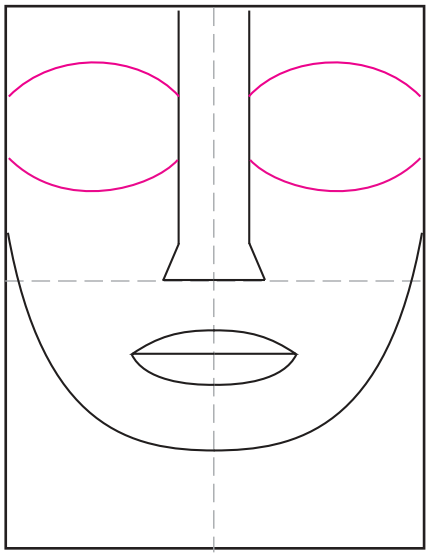

5. Draw four curved eye lines.

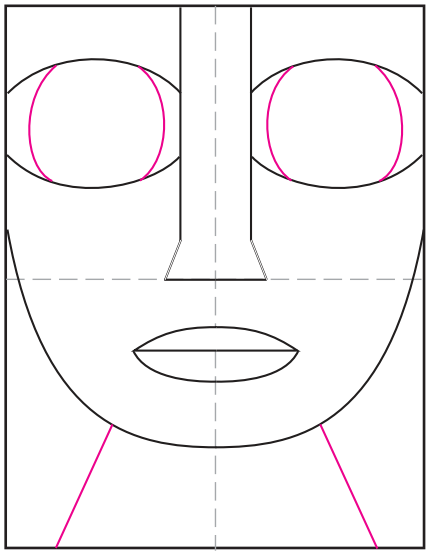

6. Finish inside eyes. Add the neck.

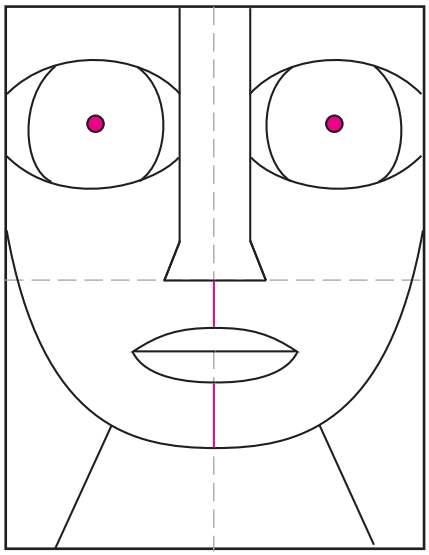

7. Add center of eyes and mouth lines.

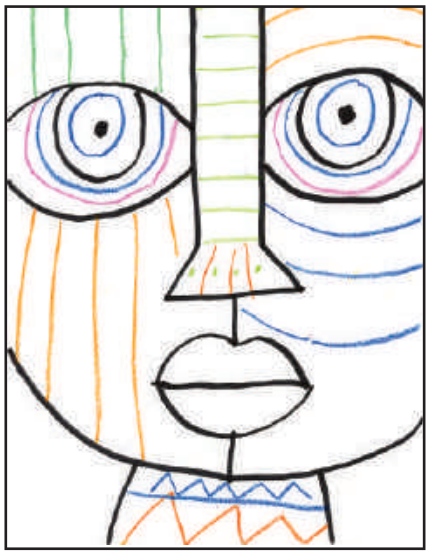

8. Trace, add crayon patterns, paint.

9. Paint with liquid watercolors.

© www.artprojectsforkids.org